Genetic modulation of gene regulatory processes

Anneke Brümmer
anneke.brummer@unil.ch

Quantitative trait loci (QTLs)

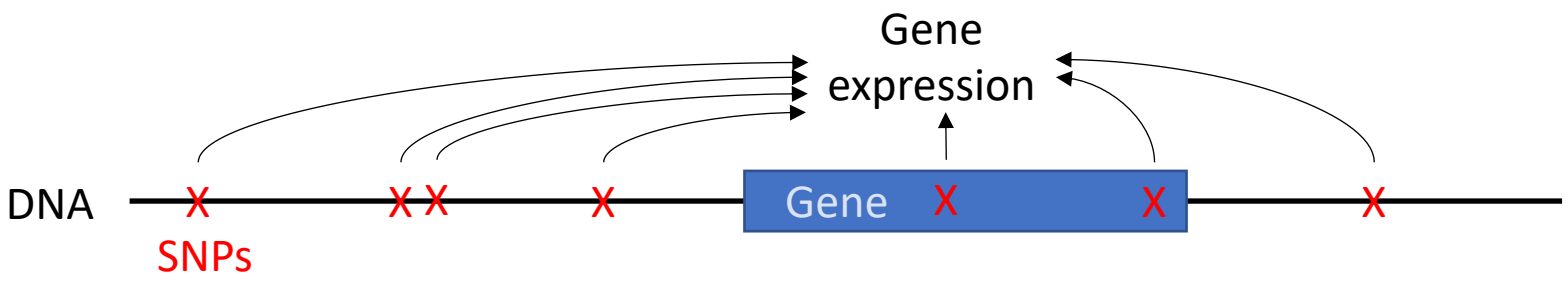

Quantitative trait loci (QTLs)

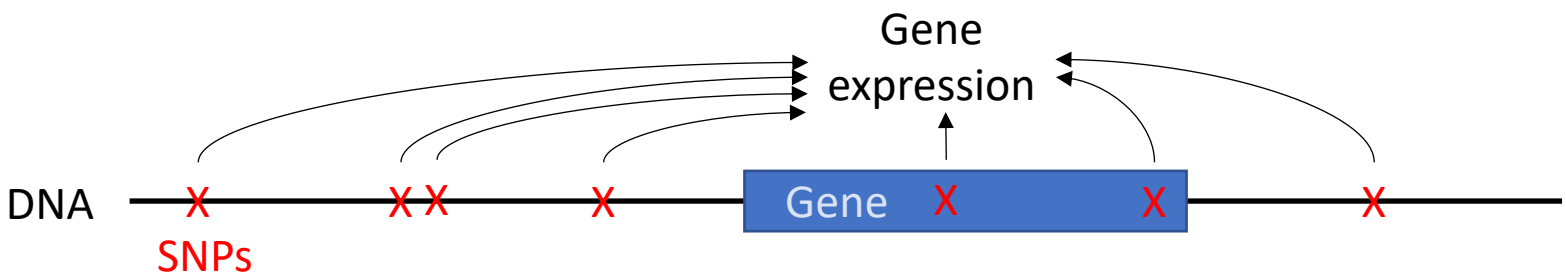

	indiv_1	indiv_2	indiv_3	indiv_4	…
SNP1	0	0	1	2	…
SNP2	1	2	1	0	…
SNP3	0	2	1	0	…
SNP4	1	1	0	2	…
…	…	…	…	…	

gene1	17	13.5	12	14	…
gene2	1.3	2.8	1.7	0.9	…
…	…	…	…	…	

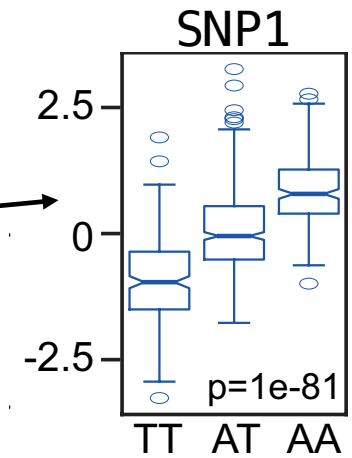

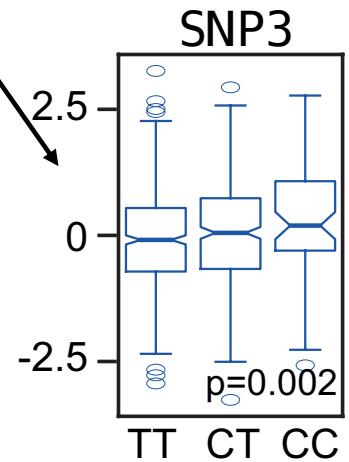

Regulation of gene expression

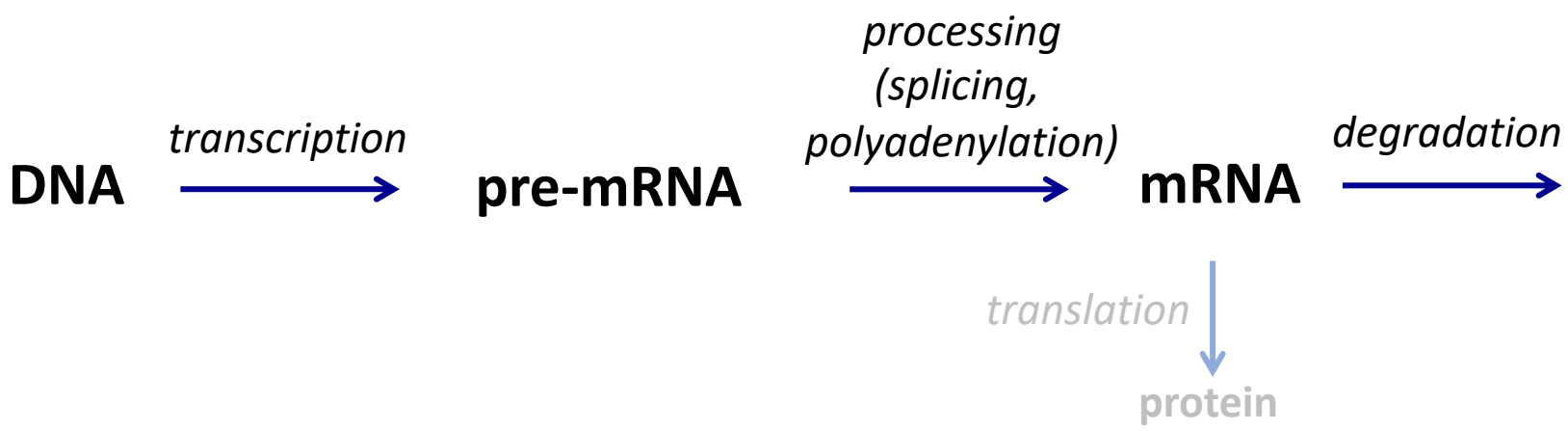

Regulation of gene expression

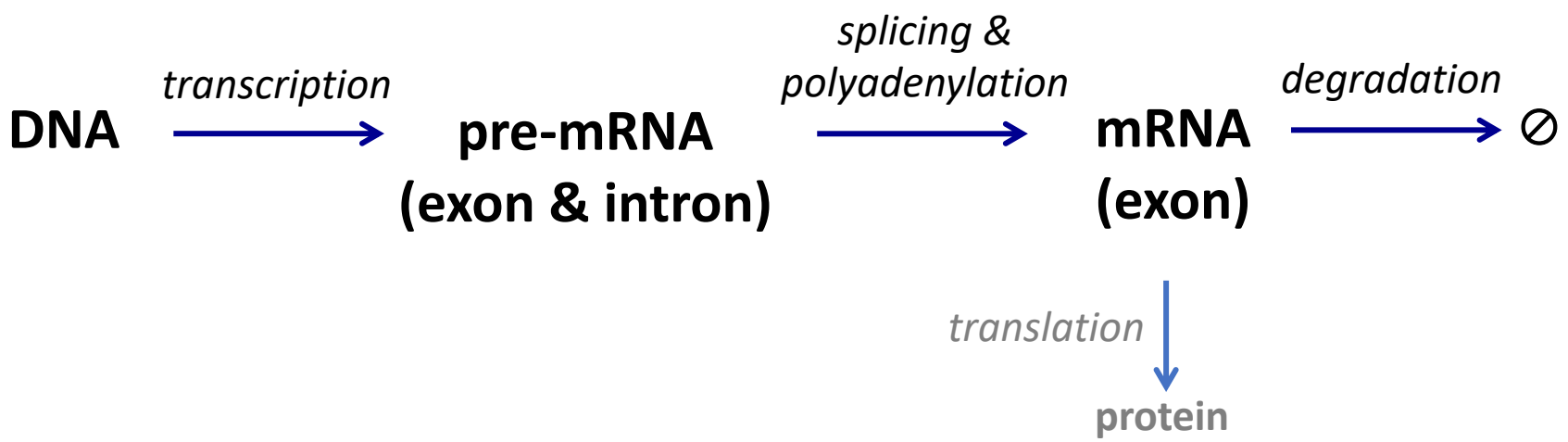

	Biological process
exon	transcription & mRNA stability
intron	transcription & splicing
exon/intron	splicing & mRNA stability

QTLs of exon and intron levels and their ratio

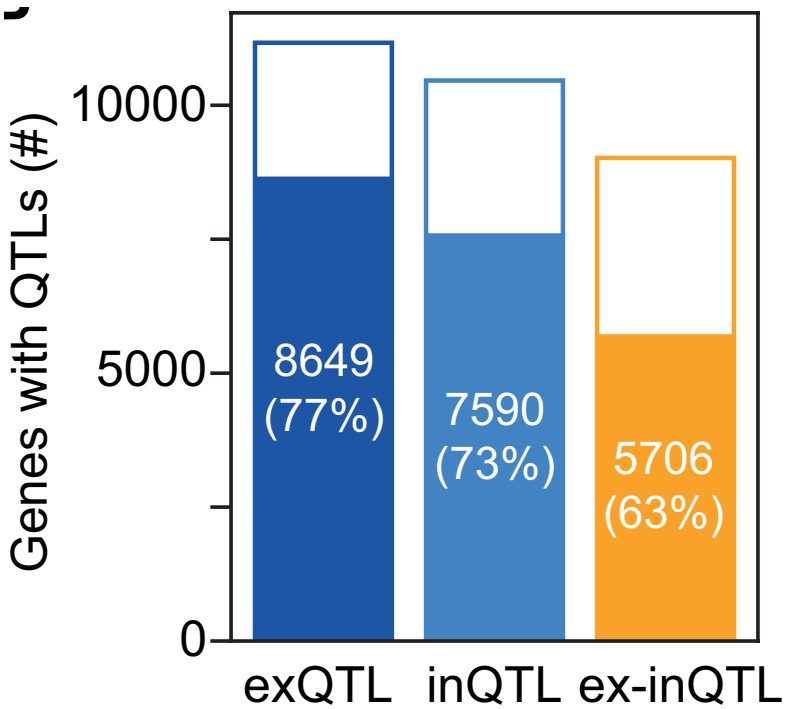

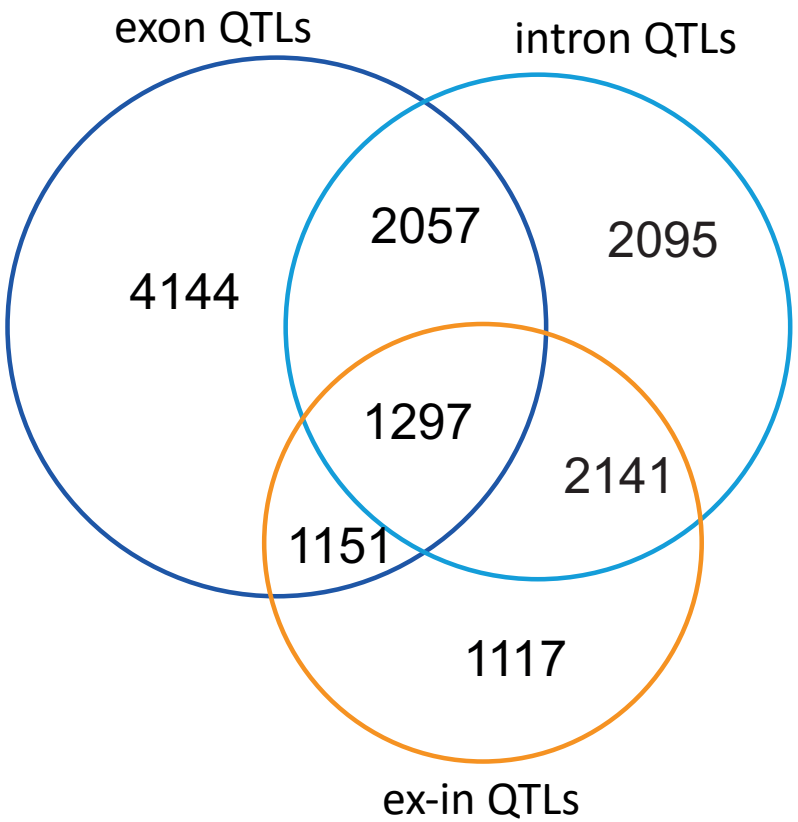

Regions of QTLs and shared QTLs

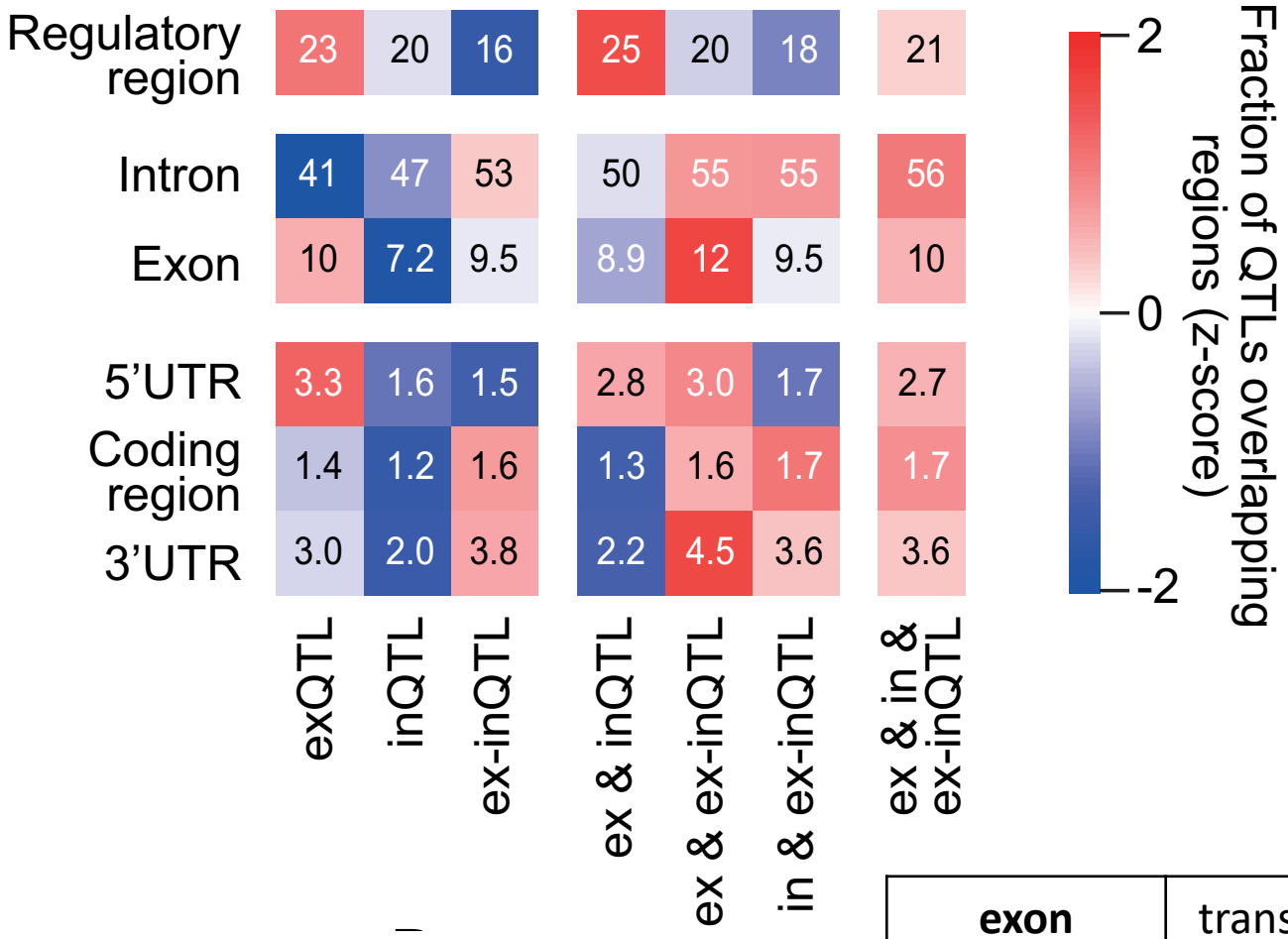

exon	transcription & mRNA stability
intron	transcription & splicing
exon/intron	splicing & mRNA stability

Effect sizes (regression slope)

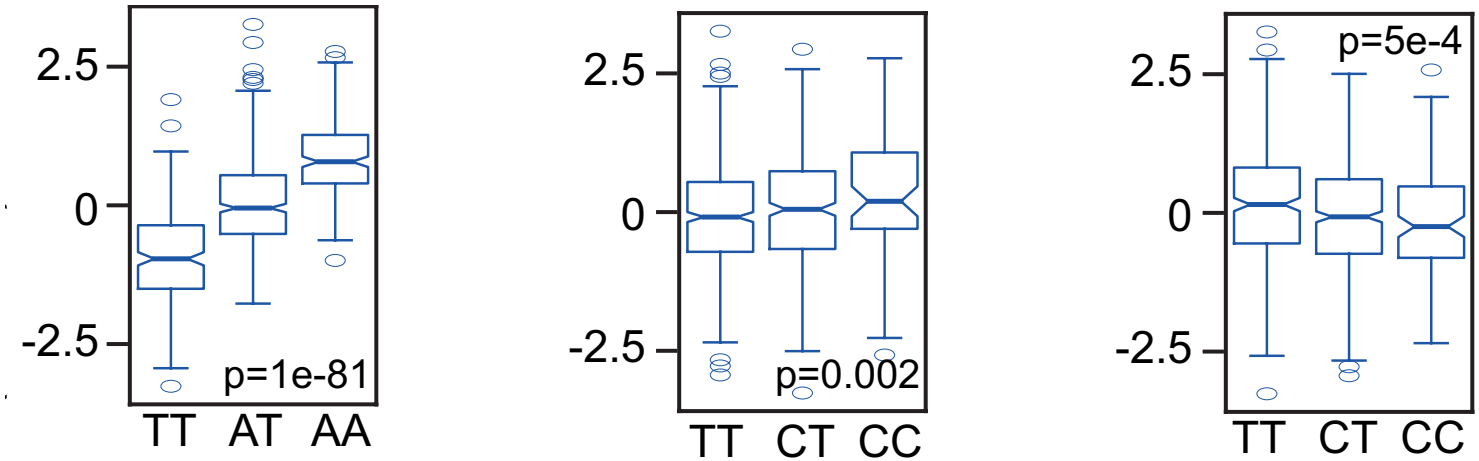

- Are effect sizes different for transcriptional, RNA processing and post-transcriptional processes?

- Do effect sizes decrase with distance from a gene?

QTL effect sizes and allele frequencies

- Are effect sizes correlated with the allele frequencies in a population? (stronger molecular effect -> stronger fitness difference?)

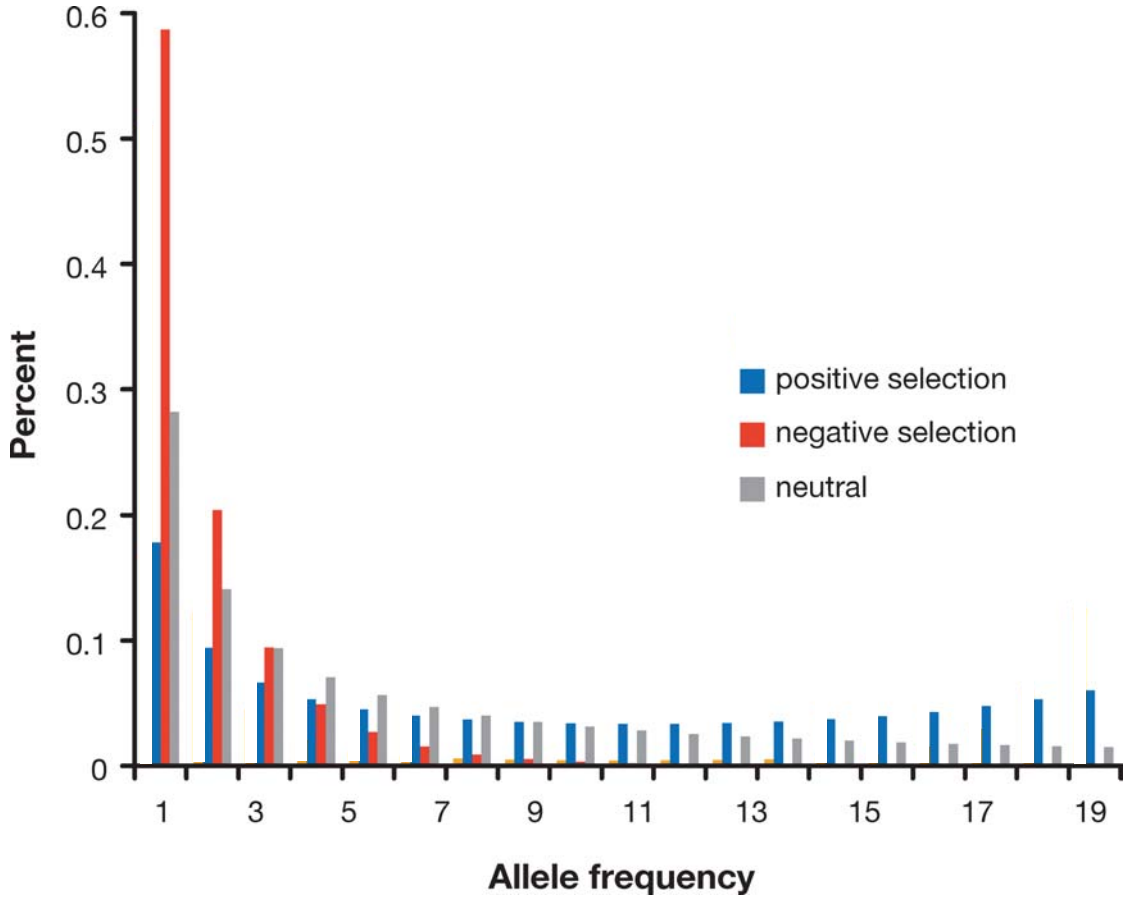

Nielsen R. Annu Rev Genet (2005)

- Is this similar for e.g. secondary QTLs?
- What about QTLs overlapping GWAS loci?

What you will learn

- Data Analysis with Python
- Plotting with Python
- Integration of QTL data with allele frequency data

Questions: anneke.brummer@unil.ch